技术说明，如有变更恕不另行通知，请参阅最新产品资料

We will not inform again if the technical instruction has any change, please refer to the latest product information.

液晶多功能表

Liquid crystal multifunctional electric meter

使用手册（**V2.0**）

Use manual (V 2 . 0)

智能综合电参数仪表用户手册

User manual of intelligent comprehensive electric parameter meter

感谢您选择本公司研发的智能综合电参数仪表，为了方便您选购和安全、正确、高效的使用本仪表，请仔细阅读本说明书并在使用时务必注意以下几点。

Thanks for choosing our company's intelligent comprehensive electric parameter meter, in order to let you purchase conveniently and use this meter safely, correctly and high efficiently, please carefully read this manual and pay attention to the following items in the using process.

注意 CAUTION:

◆该装置必须有专业人员进行安装与检修；

This equipment must be installed and inspected by the professional personnel;

◆在对该装置进行任何内部或外部操作前、必须切断输入信号和电源；

Cut off the input signal and power source before carrying out any inside or outside operation for this equipment;

◆始终使用合适的电压检测装置来确定仪表各部位无电；

Make sure use the suitable voltage to detect all the parts of meter are no electricity;

◆提供给该装置的电参数需在额定范围内。

The electric parameters of equipment must be in the rated range.

下述情况况会导致装置损坏或装置工作的异常:

The following situation will lead to the equipment is damaged or the equipment can not work normally:

◆辅助电源电压超范围

The auxiliary power supply and voltage are out of scope

◆配电系统频率超范围

The frequency of power distribution system is out of scope

◆电流或电压输入极性不正确

The The input polarity of current or voltage is incorrect

◆带电拨通信插头

Pull the communication plug with electricity

◆未按要求连接端子连线

Connect the connection terminal without according to the requirement

申明

Declaration

版权所有,未经本公司之书面许可,此手册中任何段落,章节内容均不得被摘抄、拷贝或以任何形式复制、传播，否则一切后果由违者自负。

All rights reserved, without our company's written approval, any paragraph, chapter content in this manual is not allowed to excerpt, copy or spread by any form,or else all consequences will be undertaken by the violator.

本公司保留一切法律权利。

Our company will reserve all the legal rights.

本公司保留对手册所描述之产品规格进行修改的权利、恕不另行通知。订货前，请垂询当地代理商以获悉本产品的最新规格。

Our company will reserve the rights to carry out the modification for the product specifications described in this manual without notice. Please ask the local agents to understand the latest product specifications before ordering.

三、写有功电能底数：例如写 S6.8Kwh 换算 16 进制 426333333

III. Write the active electric energy logarithm: for example, write S6.8Kwh is converted to hexadecimal 426333333

地址 Address	命令 Command	起始寄存器地址 (高位) The starting register address (high digit)	起始寄存器地址 (低位) The starting register address (low digit)	寄存器个数 (高位) The starting register number (high digit)	寄存器个数 (低位) The starting register number (low digit)	字节数 Bytes	寄存器值 (高位) Register value (high digit)	寄存器值 (低位) Register value (low digit)	寄存器值 (高位) Register value (high digit)	寄存器值 (低位) Register value (low digit)	CRC16 低位 low digit	CRC16 高位 high digit
01H	10H	20H	04H	00H	02H	04H	42H	63H	33H	33H	DBH	1EH

写负有功电能底数：起始寄存器地址（低位）为 06H

Write the negative active electric energy logarithm: The starting register address (low digit) is 06H

写正无功电能底数：起始寄存器地址（低位）为 08H

Write the positive reactive electric energy logarithm: The starting register address (low digit) is 08H

写负无功电能底数：起始寄存器地址（低位）为 0AH

Write the negative reactive electric energy logarithm: The starting register address (low digit) is 0AH

四、写电压变比：例如电压变比 100 换算 16 进制 00H64H

IV. Write the voltage ratio: For example, the voltage ratio 100 is converted to hexadecimal 00H64H

地址 Address	命令 Command	起始寄存器地址 (高位) The starting register address (high digit)	起始寄存器地址 (低位) The starting register address (low digit)	寄存器值(高位) Register value (high digit)	寄存器值(低位) Register value (low digit)	CRC16 低位 low digit	CRC16 高位 high digit
01H	06H	00H	05H	00H	64H	98H	20H

五、写电流变比：例如电流变比 100 换算 16 进制 00H64H

V. Write the current ratio: For example, the current ratio 100 is converted to hexadecimal 00H64H

地址 Address	命令 Command	起始寄存器地址 (高位) The starting register address (high digit)	起始寄存器地址 (低位) The starting register address (low v)	寄存器值 (高位) Register value (high digit)	寄存器值 (低位) Register value (low digit)	CRC16 低位 low digit	CRC16 高位 high v
01H	06H	00H	07H	00H	64H	39H	E0H

目录

Table of Content

一、产品简介- - - -

8-1、关于通讯 - - -

设置：

Setting:

D0-1:第一路开关量输出

D0-1: First circuit switching value output

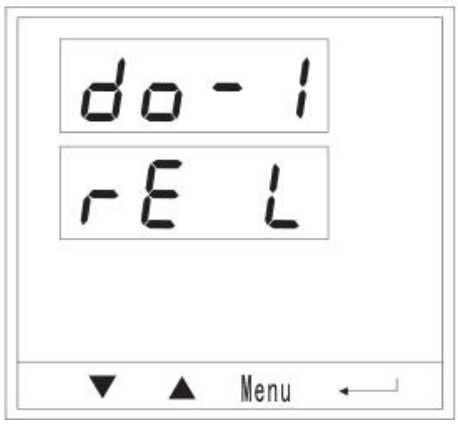

L:继电器电平输出

L: relay level output

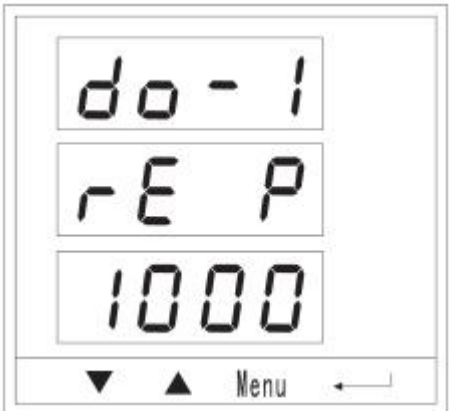

P:继电器脉冲输出

P: Relay pulse output

1000:持续时间 1000ms (可设范围 l-1200ms)

1000: duration 1000ms (setting range is among l-1200ms)

开关量输入输出状态对应表格

Corresponding table of switching value input and output status

\	D04	D03	D02	D01
	DI4	DI3	DI2	DI1
00H	0	0	0	0
01H	0	0	0	1
02H	0	0	1	0
03H	0	0	1	1
04H	0	1	0	0
05H	0	1	0	1
06H	0	1	1	0
07H	0	1	1	1
08H	1	0	0	0
09H	1	0	0	1
0AH	1	0	1	0
0BH	1	0	1	1
0CH	1	1	0	0
0DH	1	1	0	1
0EH	1	1	1	0
0FH	1	1	1	1

图中 0 表示开关量状态关闭，1 表示开关量状态打开

In the table, 0 shows the switching value status is closed, 1 shows switching value status is opened.

二、遥控功能

II. Remote control function

写开关量输出发送帧：

Write the sending frame of switching value output

地址 Address	命令 Command	开关量输出通道选择 Selection of switching value output pathway		开关量输出状态选择 Selection of switching value output status		CRC16 低位 low digit	CRC16 高位 high digit
01H	05H	00H	00H	00H	00H	CDH	CAH

注：开关量通道选择：第一路开出 00H 00H　　第二路 00H 01H

第三路开出 00H 02H　第四路 00H 03H

Notes: Selection of switching value output pathway: the first circuit opens 00H 00H　　second circuit opens 00H 01H

third circuit opens 00H 02H　fourth circuit opens 00H 03H

开关量状态选择：00H00H 关闭开出 FFH00H 打开开出

Selection of switching value output status: 00H00H power-off open　　FFH00H power-on open

写开关量输入接收帧与发送帧一致

Write the receiving frame of switching value input is consistent with the sending frame

一、产品简介

I. Product introduction

1-1、引用标准

1-1. Reference standard

引用国家标准

Refer to the national standards

GB/T 17215.211-2006 交流电测量设备 通用要求、试验和试验条件 第 11 部分:测量设备

GB/T 17215.211-2006 alternating current measuring equipment common requirement, test and test condition 11th part: Measuring equipment

GB/T 17215.322-2008 交流电测量设备 特殊要求 第 22 部分:静止式有功电能表（0.2S 级和 0.5S 级)

GB/T 17215.322-2008 alternating current measuring equipment special requirement 22th part: Static watt-hour meter (0.2S level and 0.5S level)

GB/T 17215.323-2008 交流电测量设备 特殊要求 第 23 部分:静止式无功电能表(2 级和 3 级)

GB/T 17215.323-2008 alternating current measuring equipment special requirement 23th part: Static watt-hour meter (2 level and 3 level)

GB/T 22264.1-2008 安装式数字显示电测量仪表 第 1 部分：定义和通用要求

GB/T 22264.1-2008 mounted digital display electric measuring meter 1th part: Definitions and common requirements

GB/T 22264.2-2008 安装式数字显示电测量仪表 第 2 部分:电流表和电压表的特殊要求

GB/T 22264.2-2008 mounted digital display electric measuring meter 2th part: Special requirements for amperemeter and voltmeter

GB/T 22264.3-2008 安装式数字显示电测量仪表 第 3 部分:功率表和无功功率表的特殊要求

GB/T 22264.3-2008 mounted digital display electric measuring meter 3th part: Special requirements for power meter and reactive power meter

GB/T 22264.4-2008 安装式数字显示电测量仪表 第 4 部分:频率表的特殊要求

GB/T 22264.4-2008 mounted digital display electric measuring meter 4th part: Special requirements for frequency meter

GB/T 22264.5-2008 安装式数字显示电测量仪表 第 5 部分:相位表和功率因数表的特殊要求

GB/T 22264.5-2008 mounted digital display electric measuring meter 5th part: Special requirements for phase meter and power factor meter

GB/T 22264.7-2008 安装式数字显示电测量仪表 第 7 部分：多功能仪表的特殊要求

GB/T 22264.7-2008 mounted digital display electric measuring meter 7th part: Special requirements for Multifunctional meter

GB/T 22264.8-2009 安装式数字显示电测量仪表 第 8 部分：推荐的试验方法

GB/T 22264.8-2009 mounted digital display electric measuring meter 8th part: recommended test method

1-2、产品概述

1-2. Product summary

智能综合电参数仪表是针对电力系统、工矿企业、公共设施、智能大厦等的电力智能监控和电能计量参考等需求而设计，是采用大规模集成电路，运用交流采样计算方法测量计算出各项电力参数，能够高精度测量三相电网中的所有常用电力参数，三相电压、三相电流、有功功率、无功功率、视在功率、频率、功率因数、四象限电能、累计有功/无功电能量、开关量输入监测、2－31 次谐波分量，并带有通讯接口、继电器输出控制、电能脉冲输出等功能。

Intelligent comprehensive electric parameter meter is designed by the electric power intelligent monitoring and electric energy metering referenace and other demands of electric power system, industrial and mining enterprises, public facilities, intelligent buildings and other, it is adopted by large scale integrated circuit, it can measure and work out all items of electric power parameters by the alternating current sampling algorithm, moreover, it can make a high-precision measurement for all the common electric power parameters, three-phase voltage, three-phase current, active power, reactive power, apparent power, frequency, power factor, four quadrant electrical energy, accumulated active/ reactive electrical energy, switching value input monitoring, and 2-31 times harmonic wave components in the three-phase power grid, the meter has the communication interface, relay output control, electrical energy pulse output and other functions.

智能综合电参数仪表具备多种扩展功能可供选择：2 路 RS485 通讯接口、4 路继电器输出、本地或远程的开关信号监测和控制输出功能(“ 遥控” 功能)、脉冲输出；可编程为报警信号输出或者其他控制信号输出。智能综合电参数仪表具有极高的性能价格比，可以直接取代常规电力变送器、测量指示仪表、电能计量仪表以及相关的辅助单元。作为一种先进的智能化、数字化的电网前端采集元件，已广泛应用于各种控制系统、SCADA 系统和能源管理系统中、变电站自动化、配电网自动化、小区电力监控、工业自动化、智能建筑、智能型配电盘、开关柜中，具有安装方便、接线简单、维护方便，工程量小、现场可编程设置输入参数、能够完成业界不同 PLC、工业控制计算机通讯软件的组网。

Intelligent comprehensive electric parameter meter has many kinds of extended function for choosing: 2 circuits RS485 communication interface, 4 circuits relay output, local or remote switching signal monitoring and control output function (“remote control” function), pulse output; it can be programmed as alarm signal output or other control signal output. Intelligent comprehensive electric parameter meter has extreme performance performance-cost ratio, which can directly replace the conventional electric transmitters, measuring indicators, electric energy meters and the relevant auxiliary units. As a kind of advanced intelligent, digitized power grid front-end acquisition element, it is widely applied in all types of control systems, SCADA systems and energy management systems, substation automation, distribution grid automation, housing estate power monitoring, industrial automation, intelligent buildings, intelligent switchboards and switch cabinets, its characteristics show convenient installation, easy wiring, simple maintenance and small quantities, it can program the input parameter, complete the networking of industry different PLC and industrial control computer communication software on the field.

二、技术参数

II. Technical parameters

<table>
<tr><th colspan="3">项目 Items</th><th>参数 Parameters</th></tr>
<tr><td rowspan="12">信号输入
Signal input</td><td colspan="2">接线 Wiring</td><td>三相三线/三相四线 Three phase three wire/ three phase four wire</td></tr>
<tr><td rowspan="4">电压
Voltage</td><td>量程
Measuring range</td><td>相电压 Phase voltage：100V/400V</td></tr>
<tr><td>过载
Overload</td><td>持续：1.2 倍瞬时：电压 2 倍（5 秒）
Duration: 1.2 times instant: voltage 2 times (5 seconds)</td></tr>
<tr><td>功耗 Power consumption</td><td><1VA(每相)
<1VA (per phase)</td></tr>
<tr><td>输入阻抗
Input impedance</td><td>≥2MQ</td></tr>
<tr><td rowspan="4">电流
Current</td><td>量程
Measuring range</td><td>AC 1A/5A</td></tr>
<tr><td>过载
Overload</td><td>持续：1.2 倍瞬时：电流 10 倍（5 秒）
Duration: 1.2 times instant: current 10 times (5 seconds)</td></tr>
<tr><td>功耗 Power consumption</td><td><0.4VA (每相）
<0.4VA (per phase)</td></tr>
<tr><td>输入阻抗
Input impedance</td><td><10mΩ</td></tr>
<tr><td colspan="2">频率 Frequency</td><td>45 ～65Hz</td></tr>
<tr><td colspan="3">电源 Power source</td><td>AC/DC 85～265V,≤10VA</td></tr>
<tr><td colspan="3">电能脉冲 Electric energy pulse</td><td>(内部无源)光耦集电极输出
(Passive inside) optical coupling collector output</td></tr>
</table>

9-3、设置数据寄存器地址:

9-3 Setting data register address

一、遥信功能

I. Remote signaling function

1、读开关量输出发送帧：

1. Read the sending frame of switching value output

地址 Address	命令 Command	起始寄存器地址 (高位） The starting register address (high digit)	起始寄存器地址 (低位） The starting register address (low digit)	寄存器个数 (高位） The starting register number (high digit)	寄存器个数 (低位） The starting register number (low digit)	CRC16 低位 low digit	CRC16 高位 high digit
01H	01H	00H	00H	00H	04H	3DH	C9H

接收帧：(下表四路都有输出）

Receiving frame: (four circuits in the following table all have the output)

地址 Address	命令 Command	字节长度 Byte length	开关量输出状态 Switching value output status	CRC16 低位 low digit	CRC16 高位 high digit
01H	01H	01H	0FH	11H	8CH

2、读开关量输入发送帧:

2. Read the sending frame of switching value input

地址 Address	命令 Command	起始寄存器地址 (高位） The starting register address (high digit)	起始寄存器地址 (低位） The starting register address (low digit)	寄存器个数 (高位） The starting register number (high digit)	寄存器个数 (低位） The starting register number (low digit)	CRC16 低位 low digit	CRC16 高位 high digit
01H	02H	00H	00H	00H	04H	79H	C9H

接收帧：(下表四路都有输入）

Receiving frame: (four circuits in the following table all have the input)

地址 Address	命令 Command	字节长度 Byte length	开关量输出状态 Switching value output status	CRC16 低位 low digit	CRC16 高位 high digit
01H	02H	01H	0FH	E1H	8CH

40ACh	谐波 Harmonic wave IC24	Integer	1	R	0.1%	
40ADh	谐波 Harmonic wave IC25	Integer	1	R	0.1%	
40AEh	谐波 Harmonic wave IC26	Integer	1	R	0.1%	
40AFh	谐波 Harmonic wave IC27	Integer	1	R	0.1%	
40B0h	谐波 Harmonic wave IC28	Integer	1	R	0.1%	
40B1h	谐波 Harmonic wave IC29	Integer	1	R	0.1%	
40B2h	谐波 Harmonic wave IC30	Integer	1	R	0.1%	
40B3h	谐波 Harmonic wave IC31	Integer	1	R	0.1%	

通讯 Communication	RS485 通讯接口，物理层隔离，M0DBUS-RTU 协议， 通讯地址 1-247,通讯速度 4800～19200， RS485 communication interface, physical layer isolation, M0DBUS-RTU agreement, communication address 1-247, communication speed 4800～19200 校验方式 n82; o81; e81; n81 Verification mode n82; o81; e81; n81
开关量输出 Switching value output	继电器输出（5A 250VAC、5A 30VDC)、 可编程遥控输出（电平或脉冲输出） Relay output (5A 250VAC 、 5A 30VDC), programmable remote output (level or pulse output)
开关量输入 Switching value input	有源输入（AC220V ± 10%)湿接点和无源 输入干接点（可选） Active input (AC220V ± 10%) wet contact and passive input dry contact (optional)
模拟量输出 Analog output	DC4-20mA 模拟量变送输出，负载电阻<510Ω DC4-20mA analog transmitting output, load resistance <510Ω
测量等级 Measuring level	测量电量：0.5 级； 频率：±0.1Hz Measuring electric energy: 0.5 level; frequency: ±0.1Hz 有功电能：0.5S 级 无功电能：1 级 Active electric energy: 0.5S level reactive electric energy: 1 level
显示方式 Display method	LCD 液晶显示 LED nixie tube display; LCD liquid crystal display
环境 Environment	工作环境：-10～55°C，相对湿度<95%， Work environment: -10～55°C, relative humidity <95%, 无腐蚀性气体场所；海拔：<2500 米 Noncorrosive gas place; altitude: <2500 m 存储环境：-20～75°C，相对湿度<95% Stored environment: -20～75°C, relative humidity <95%
安全 Safety	绝缘：输入、电源、输出端子对壳电阻>100MΩ Insulation: input, power source, output terminal paired shell resistance >100MΩ 耐压：电源与输入>AC2KV、电源与输出>AC2KV、输入与输出>AC1KV Withstand voltage: power source and input >AC2KV, power source and output >AC2KV, input and output >AC1KV

2-1、准确度

2-1. Accuracy

参数名称 Parameter name	内容 Content	精度 Precision	分辨率 Resolution ratio
电压 Voltage	Ua、Ub、Uc、Uab、Ubc、Uca	0.5%	0.1V
电流 Current	Ia、Ib、Ic	0.5%	0.001A
有功功率 Active power	P、Pa、Pb、Pc	0.5%	1W
无功功率 Reactive power	Q、Qa、Qb、Qc	0.5%	1W
视在功率 Apparent power	S、Sa、Sb、Sc	0.5%	1W
角度 Angle	ΦUa、ΦUb、 ΦUc、ΦUIa、ΦUIb、ΦUIc	0.2%	0.1°
功率因数 Power factor	CosΦ、CosΦa、CosΦb、CosΦc	0.5%	0.1%

频 率 Frequency	Hz	0.1Hz	0.01Hz
有功电能 Active electric energy	＋KWh 总、－KWh 总 ＋KWh sum、－KWh 总 sum	0.5S	0.0lKWh
无功电能 Reactive electric energy	＋KVarh 总、－KVarh 总 ＋KWh sum、－KWh 总 sum	1	0.0lKVarh
谐 波 分 量 (THD%) (选配）harmonic wave components (THD%) (optional)	Ua、Ub、Uc、Ia、Ib、Ic 的 2～31 次谐波分量、相位/THD Ua、Ub、Uc、Ia、Ib、Ic 2～31 times harmonic wave components, phase/THD	B 级 B level	0.1%

三、安装与接线

III. Installation and wiring

3-1、仪表尺寸

3-1 Meter dimension

产 品 规 格 Product specifications	外形尺寸 Boundary dimension	开孔尺寸 Hole size
42 方形 42 Square	120mm× 120mm × 86mm	11 lmm× 111mm
96 方形 96 Square	96mm×96mm×86mm	91mm×91mm
80 方形 80 Square	80mm×80mm×95mm	76mm×76mm
76 方形 76 Square	72mm×72mm×95mm	67mm×67mm

3-2、安装方法:

3-2 Installation method

在固定的配电拒上，选择合适的地方开一个相应开孔尺寸的安装孔;

Cut out a corresponding installed hole as the hole size on the suitable place of fixed distribution cabinet;

将仪表安装插入配电柜的仪表孔中；

Insert the meter into the meter hole of distribution cabinet;

把塑料夹持件插入仪表壳体的夹持槽内，用手推紧即可。

Insert the plastic clamping piece into the clamping channel of meter shell, push it tightly by hands.

409Dh	谐波 Harmonic wave IC9	Integer	1	R	0.1%	
409Eh	谐波 Harmonic wave IC10	Integer	1	R	0.1%	
409Fh	谐波 Harmonic wave IC11	Integer	1	R	0.1%	
40A0h	谐波 Harmonic wave IC12	Integer	1	R	0.1%	
40A1h	谐波 Harmonic wave IC13	Integer	1	R	0.1%	
40A2h	谐波 Harmonic wave IC14	Integer	1	R	0.1%	
40A3h	谐波 Harmonic wave IC15	Integer	1	R	0.1%	
40A4h	谐波 Harmonic wave IC16	Integer	1	R	0.1%	
40A5h	谐波 Harmonic wave IC17	Integer	1	R	0.1%	
40A6h	谐波 Harmonic wave IC18	Integer	1	R	0.1%	
40A7h	谐波 Harmonic wave IC19	Integer	1	R	0.1%	
40A8h	谐波 Harmonic wave IC20	Integer	1	R	0.1%	
40A9h	谐波 Harmonic wave IC21	Integer	1	R	0.1%	
40AAh	谐波 Harmonic wave IC22	Integer	1	R	0.1%	
40ABh	谐波 Harmonic wave IC23	Integer	1	R	0.1%	

408Eh	谐波 Harmonic wave IB24	Integer	1	R	0.1%	
408Fh	谐波 Harmonic wave IB25	Integer	1	R	0.1%	
4090h	谐波 Harmonic wave IB26	Integer	1	R	0.1%	
4091h	谐波 Harmonic wave IB27	Integer	1	R	0.1%	
4092h	谐波 Harmonic wave IB28	Integer	1	R	0.1%	
4093h	谐波 Harmonic wave IB29	Integer	1	R	0.1%	
4094h	谐波 Harmonic wave IB30	Integer	1	R	0.1%	
4095h	谐波 Harmonic wave IB31	Integer	1	R	0.1%	
4096h	谐波 Harmonic wave IC2	Integer	1	R	0.1%	c 相电流谐波， 2-31 次， 整型数，单位 0.1% C phase current harmonic wave, 2-31 times, Integers, Unit 0.1%
4097h	谐波 Harmonic wave IC3	Integer	1	R	0.1%	
4098H	谐波 Harmonic wave IC4	Integer	1	R	0.1%	
4099h	谐波 Harmonic wave IC5	Integer	1	R	0.1%	
409Ah	谐波 Harmonic wave IC6	Integer	1	R	0.1%	
409Bh	谐波 Harmonic wave IC7	Integer	1	R	0.1%	
409Ch	谐波 Harmonic wave IC8	Integer	1	R	0.1%	

3-3、接线端子功能说明

3-3. Connection terminal function instruction

信号和功能端子编号

Signal and functional terminal numbers

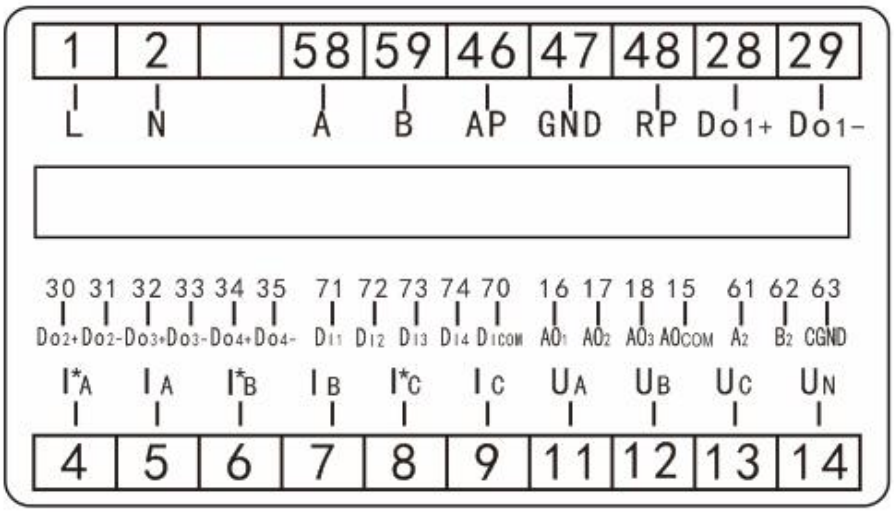

以上为开孔尺寸 111mm×111mm，91mm×91mm 的接线端子图,仅供参考,开孔尺寸为 76mm×76mm，67mm×67mm 的接线端子排布略有差异,一切以实际产品与接线标签图为准。

The above drawing is the wiring terminal of hole size (111mm*111mm，91mm*91mm) , for reference only, the layout of wiring terminal of hole size (76mm*76mm，67mm*67mm) has a slight different, everything can be referred to the actual product and wiring label drawing.

使用说明：

Using instruction:

a)1、2 为仪表工作的辅助电源，电源电压范围是 AC/DC85 -265V，请确保所供电源适用于该系列产品，以防止损坏产品。

a) 1,2 are the working auxiliary power supply of meter, the power supply and voltage range are AC/DC85 -265V, please make sure the supplying power supply is suitable for this series of products, so as to prevent the product is damaged.

b)4- 9 为电流互感器的进线端子，4、6、8（带*号）表示为电流的进线端子。11 -14 为电压输入端。

b) 4- 9 are the incoming terminals of current transformer, 4,6,8 (with * mark) show the current incoming terminals. 11-14 are the voltage input terminals.

c)46、47、48 为电能脉冲输出端子。

c) 46,47, 48 are the electric energy pulse output terminals.

d)58、59 为 485 通讯端子。

d) 58, 59 are 485 communication terminals.

e)28、29 为第 1 路开关量输出端子。

e) 28, 29 are the first circuit switching value output terminals.

f)30- 35 为第 2～4 路开关量输出端子。

f)30-35 are the 2～4 circuit switching value output terminals.

g)70 -74 为 4 路开关量输入端子。

g) 70-74 are 4 circuits switching value input terminals.

h)61 -63 为第 2 路 485 通讯端子。

h) 61-63 are the second circuit 485 communication terminals.

i)15、16、17，18 为模拟量输出端子。

i) 15, 16, 17, 18 are the analog quantity output terminals.

详细接线端子的使用，请按照具体产品外壳上的端子接线图进行连接。

The detailed wiring terminal usage can be accorded with the terminal wiring drawing on the specific product shell.

注：开孔尺寸为 111mm×111mm，91mm×91mm，可最多带 4 路开关量输入，4 路开关量输出， 3 路变送输出， 2 路通讯。开孔尺寸为 76mm×76mm， 67mm× 67mm，可最多带 2 路开关量输入，2 路开关量输出，1 路送输出，1 路通讯。

Notes: Hole sizes (111mm*111mm，91mm*91mm) can be equipped with 4 circuits switching value input, 4 circuits switching value output, 3 circuits transmitting output, 2 circuits communication at a large extend.Hole sizes (76mm*76mm，67mm*67mm) can be equipped with 2 circuits switching value input, 2 circuits switching value output, 1 circuit transmitting output, 1 circuit communication.

3-4、接线

3-4 Wiring

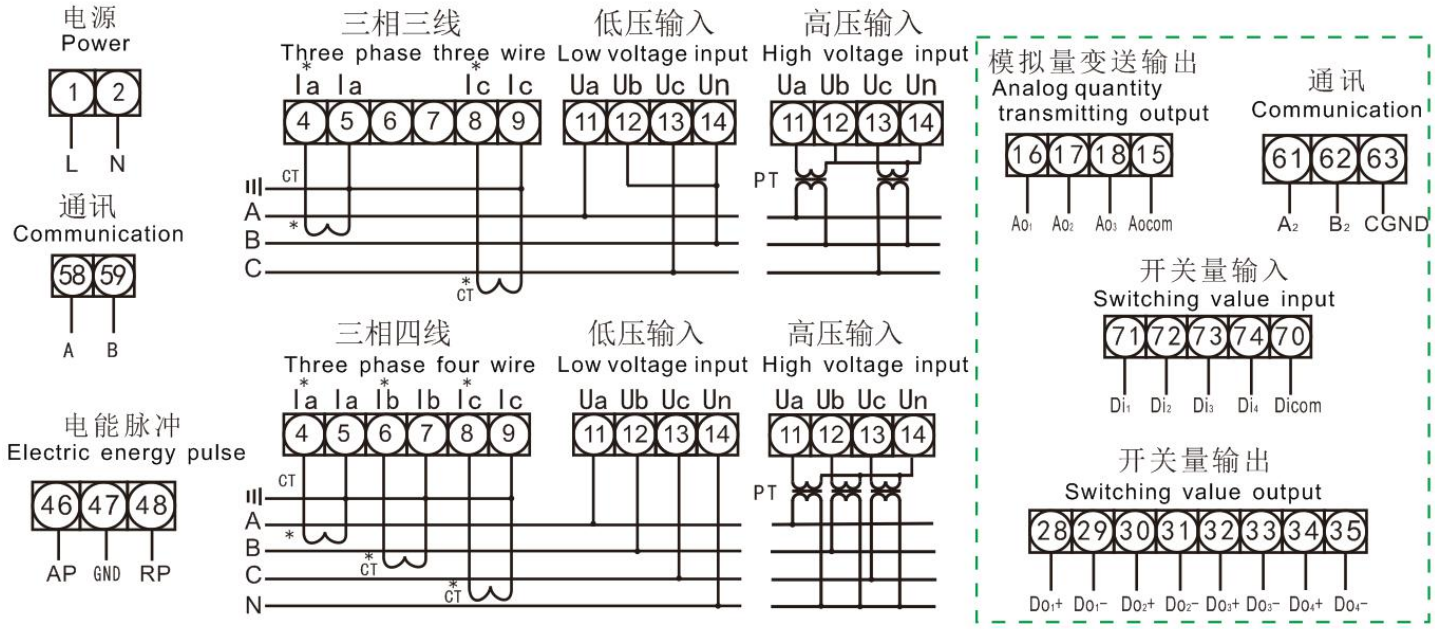

注：“└─┘”为选配功能。

实际接线以产品标签图、背贴为准。

Notes: “└─┘” is the optional function.

The actual wiring can be referred to the product label drawing and back adhesive.

3-5、接线说明

3-5 Wiring instruction

a)电压输入:输入电压不要高于产品的额定输入电压(100V 或 400V)，否则应考虑使用 PT，为了便于维护,建议使用接线排。

a) Voltage input: The input voltage can not higher than the product rated input voltage (100V or 400V), or else should consider to use PT, in order to convenient to maintain, it is better to use the line bank.

b)电流输入：标准额定输入电流为 5A 或 1A，大于 5A 的情况应使用外部 CT。如果使用的 CT 上连有其它仪表，接线应采用串接方式，去除产品的电流输入连线之前，一定要先断开 CT 一次回路或者短接二次回路，为便于维护建议使用接线排。

b) Current input: The standard rated input current is 5A or 1A, should use the outside CT in the case of more than 5A. If the using CT is connected with other meters, the wiring should be adopted by the concatenation manner, cut off CT primary circuit or short-circuit the secondary circuit before removing the product current input connecting lines, in order to convenient to maintain, it is better to use the line bank.

c)要确保输入电压、电流相对应，相序一致，方向一致，否则会出现数值和符号错误！（功率和电能）。

c) Make sure the input voltage, current phase is is corresponding, phase sequence is consitent, direction is same, or else the numerical value and symbol will have the error! (power and electric energy).

407Fh	谐波 Harmonic wave IB9	Integer	1	R	0.1%	
4080h	谐波 Harmonic wave IB10	Integer	1	R	0.1%	
4081h	谐波 Harmonic wave IB11	Integer	1	R	0.1%	
4082h	谐波 Harmonic wave IB12	Integer	1	R	0.1%	
4083h	谐波 Harmonic wave IB13	Integer	1	R	0.1%	
4084h	谐波 Harmonic wave IB14	Integer	1	R	0.1%	
4085h	谐波 Harmonic wave IB15	Integer	1	R	0.1%	
4086h	谐波 Harmonic wave IB16	Integer	1	R	0.1%	
4087h	谐波 Harmonic wave IB17	Integer	1	R	0.1%	
4088h	谐波 Harmonic wave IB18	Integer	1	R	0.1%	
4089h	谐波 Harmonic wave IB19	Integer	1	R	0.1%	
408Ah	谐波 Harmonic wave IB20	Integer	1	R	0.1%	
408Bh	谐波 Harmonic wave IB21	Integer	1	R	0.1%	
408Ch	谐波 Harmonic wave IB22	Integer	1	R	0.1%	
408Dh	谐波 Harmonic wave IB23	Integer	1	R	0.1%	

4070h	谐波 Harmonic wave IA24	Integer	1	R	0.1%	
4071h	谐波 Harmonic wave IA25	Integer	1	R	0.1%	
4072h	谐波 Harmonic wave IA26	Integer	1	R	0.1%	
4073h	谐波 Harmonic wave IA27	Integer	1	R	0.1%	
4074h	谐波 Harmonic wave IA28	Integer	1	R	0.1%	
4075h	谐波 Harmonic wave IA29	Integer	1	R	0.1%	
4076h	谐波 Harmonic wave IA30	Integer	1	R	0.1%	
4077h	谐波 Harmonic wave IA31	Integer	1	R	0.1%	
4078h	谐波 Harmonic wave IB2	Integer	1	R	0.1%	B 相电流谐波， 2-31 次， 整型数，单位 0_1% B phase current harmonic wave, 2-31 times, Integers, Unit 0.1%
4079h	谐波 Harmonic wave IB3	Integer	1	R	0.1%	
407Ah	谐波 Harmonic wave IB4	Integer	1	R	0.1%	
407Bh	谐波 Harmonic wave IB5	Integer	1	R	0.1%	
407Ch	谐波 Harmonic wave IB6	Integer	1	R	0.1%	
407Dh	谐波 Harmonic wave IB7	Integer	1	R	0.1%	
407Eh	谐波 Harmonic wave IB8	Integer	1	R	0.1%	

d)仪表可以工作在三相四线方式或者三相三线方式，用户应根据现场使用情况选择相应的接线方式。一般在没有中性线的情况下使用三相三线方式，在有中性线的情况下使用三相四线方式，三相三线可以只安装 2 个 CT（A 和 C 相），三相四线需要安装 3 个 CT（在只有 2CT 情况下可以合成另一相电流）。

d) The meter can be worked at the three-phase four-wire manner or three-phase three-wire manner, the users should choose the corresponding wiring manner by the on-site using situation. In general, use three-phase three-wire manner in the case of no neutral line, use three-phase four-wire manner under the neutral line, three phase three wire can be only installed 2 CT (A and C phase), three phase four wire is required to install 3 CT (it can be synthesized another phase current if only have 2CT).

注意：仪表内可设置两种接线方式，实际接线方式和表内设置方式必须一致，否则仪表的测量数据不准确。

Attention: The meter can be set with two wiring manners, the actual wiring manner must be consistent with the setting manner in the meter, or else the meter measuring data is incorrect.

注：三相三线接线时，请将 12 与 14 号端子外部短接；具体接线方式、脉冲常数等技术参数以产品随机接线图为准。

Notes: When using three phase three wire wiring manner, please short-circuit the outside of 12 and 14 terminal; the detailed wiring manner, pulse constant and other technical parameters can be referred to the product random wiring drawing.

四、显示与设置操作

IV. Display and setting operation

4-1、仪表面板：产品面板

4-1 Meter panel: product panel

液晶 Liquid crystal

4-2、面板指示

4-2 Panel indication

K/M：K -千，M -兆为测量数据的数量级。例如 第一排数码显示 10 .23 的同时 k 灯和电压符号指示灯都亮表示 Ua=10.23kV，k 灯和 M 灯都不亮则为基本单位 V。

K/M: K-kilobyte, M-megabyte are the quantity level of measuring data. For example, the digital display in the first row is 10.23, K light and the indicating light of voltage symbol are on show Ua=10.23kV, K light and the indicating light of voltage symbol are out show the basic unit V.

V：V 指示电压。

V：V shows voltage

A：A 指示电流。

A：A shows current

W：W 指示有功功率。

W：W shows active power

Var：Var 指示无功功率。

Var：Var shows reactive power

VA：VA 指示视在功率。

VA：VA shows apparent power

KWh：KWh 指示有功电能。

KWh：KWh shows active electric energy

KVarh：KVarh 指示无功电能。

KVarh：KVarh shows reactive electric energy

Hz：Hz 指示频率。

Hz：Hz shows frequency.

@：@指示相位。

@：@ shows phase

%：%指示畸变率。（有谐波功能才会显示）

%：% shows aberration rate. (only display in the case of having the harmonic wave function)

Cos φ ：Cos φ 指示功率因数。

Cos φ ：Cos φ shows power factor.

4-3、面板操作及分页

4-3 Panel operation and paging

down“ ▼ ”下调键：测量状态或设置状态下，作向下轮显功能；设置状态下，对数值设置活动的位作左移。

down“ ▼ ”: down key: under the measuring status or setting status, make the down alternate display function; move the moving bit of numerical value setting to the left under the setting status.

up“▲”上调键：测量状态或设置状态下，作向上轮显功能；设置状态下，对活动的位作加 1 处理。

up“▲” up key: under the measuring status or setting status, make the up alternate display function; add 1 for the moving bit.

Enter“↵”确认键：测量状态下，此键无用，设置状态下，进入菜单激活设置项和确认退出；

Enter“↵” confirm key: under the measuring status, this ket without the function, under the setting status, enter into the menu to activate the setting item and confirm it and then exit;

Menu 菜单键：测量状态下，此键的作用是进入设置状态；在设置状态下，作用是不保存退出；当参数设置完成，按下菜单键返回到测量状态。

Menu key: Under the measuring status, press this key to enter into the setting status; under the setting status, the function is not saved and exited; press the menu key to return to the measuring status after setting the parameters.

4061h	谐波 Harmonic wave IA9	Integer	1	R	0.1%	
4062h	谐波 Harmonic wave IA10	Integer	1	R	0.1%	
4063h	谐波 Harmonic wave IA11	Integer	1	R	0.1%	
4064h	谐波 Harmonic wave IA12	Integer	1	R	0.1%	
4065h	谐波 Harmonic wave IA13	Integer	1	R	0.1%	
4066h	谐波 Harmonic wave IA14	Integer	1	R	0.1%	
4067h	谐波 Harmonic wave IA15	Integer	1	R	0.1%	
4068h	谐波 Harmonic wave IA16	Integer	1	R	0.1%	
4069h	谐波 Harmonic wave IA17	Integer	1	R	0.1%	
406Ah	谐波 Harmonic wave IA18	Integer	1	R	0.1%	
406Bh	谐波 Harmonic wave IA19	Integer	1	R	0.1%	
406Ch	谐波 Harmonic wave IA20	Integer	1	R	0.1%	
406Dh	谐波 Harmonic wave IA21	Integer	1	R	0.1%	
406Eh	谐波 Harmonic wave IA22	Integer	1	R	0.1%	
406Fh	谐波 Harmonic wave IA23	Integer	1	R	0.1%	

4052h	谐波 Harmonic wave UC24	Integer	1	R	0.1%	
4053h	谐波 Harmonic wave UC25	Integer	1	R	0.1%	
4054h	谐波 Harmonic wave UC26	Integer	1	R	0.1%	
4055h	谐波 Harmonic wave UC27	Integer	1	R	0.1%	
4056h	谐波 Harmonic wave UC28	Integer	1	R	0.1%	
4057h	谐波 Harmonic wave UC29	Integer	1	R	0.1%	
4058h	谐波 Harmonic wave UC30	Integer	1	R	0.1%	
4059h	谐波 Harmonic wave UC31	Integer	1	R	0.1%	
405AM	谐波 Harmonic wave IA2	Integer	1	R	0.1%	A 相电流谐波， 2-31 次, 整型数， 单位 0.1% A phase current harmonic wave, 2-31 times, Integers, Unit 0.1%
405Bh	谐波 Harmonic wave IA3	Integer	1	R	0.1%	
405Ch	谐波 Harmonic wave IA4	Integer	1	R	0.1%	
405Dh	谐波 Harmonic wave IA5	Integer	1	R	0.1%	
405Eh	谐波 Harmonic wave IA6	Integer	1	R	0.1%	
405Fh	谐波 Harmonic wave IA7	Integer	1	R	0.1%	
4060h	谐波 Harmonic wave IA8	Integer	1	R	0.1%	

轮显时按以下顺序：

Press the following order in the alternate display process:

轮显时按以下顺序：

Press the following order in the alternate display process:

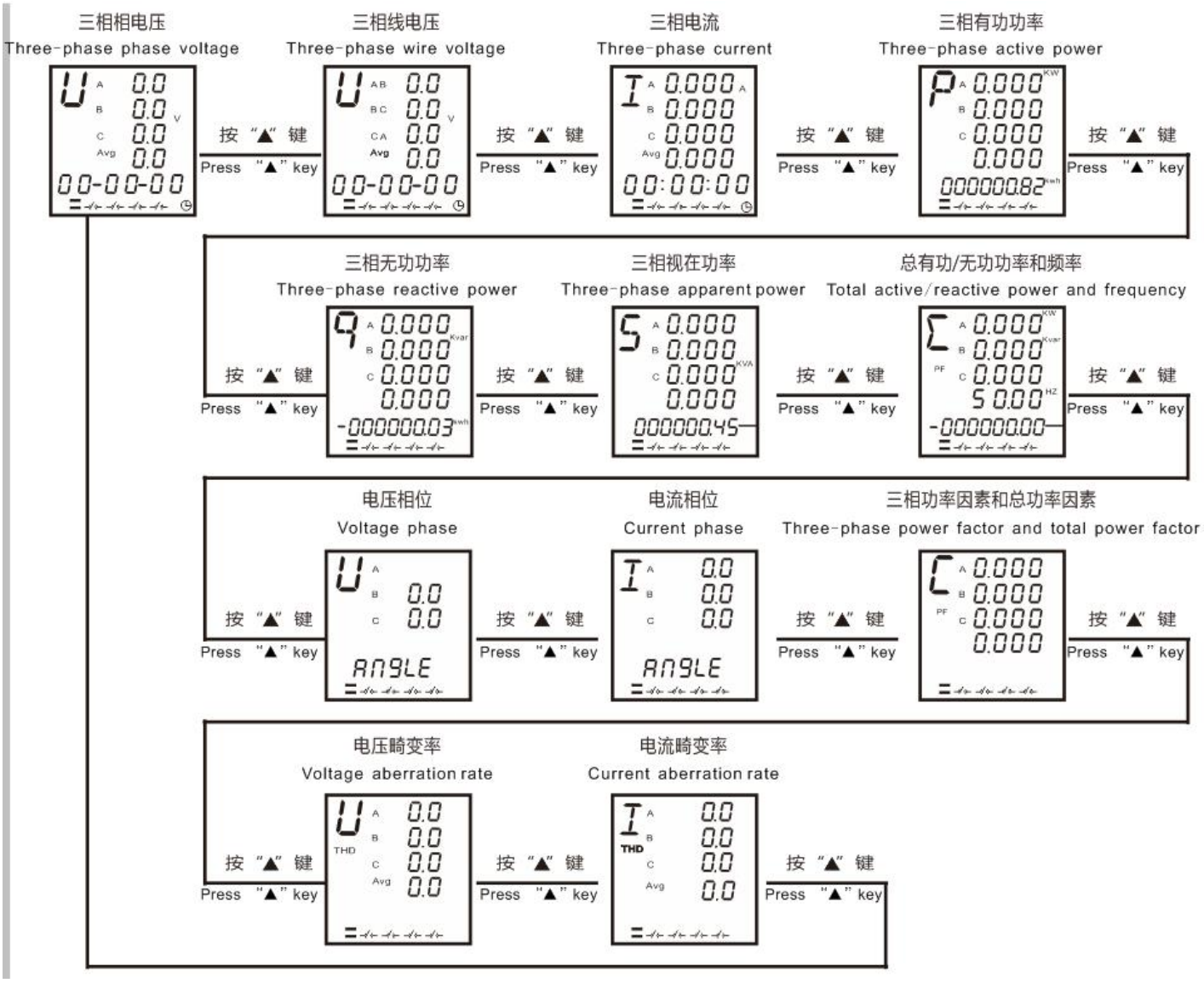

液晶显示界面

Liquid crystal display interface

注意:分次谐波电流电压畸变率的数据通过通讯上报,面板无分页显示。电压畸变率和电流畸变率有谐波功能才会显示。不带选配功能，选配功能界面无显示。

Attention:The data of current and voltage aberration rate of sub harmonic wave is reported by the communication, the panel without the the paging display. Only the voltage aberration rate and current aberration rate have the harmonic wave function can be displayed. No optional function, and the optional function interface is not displayed.

编程菜单结构:

Programming menu structure:

按“▲”键

Press “▲” key

按“↵”键

Press “ ↵ ” key

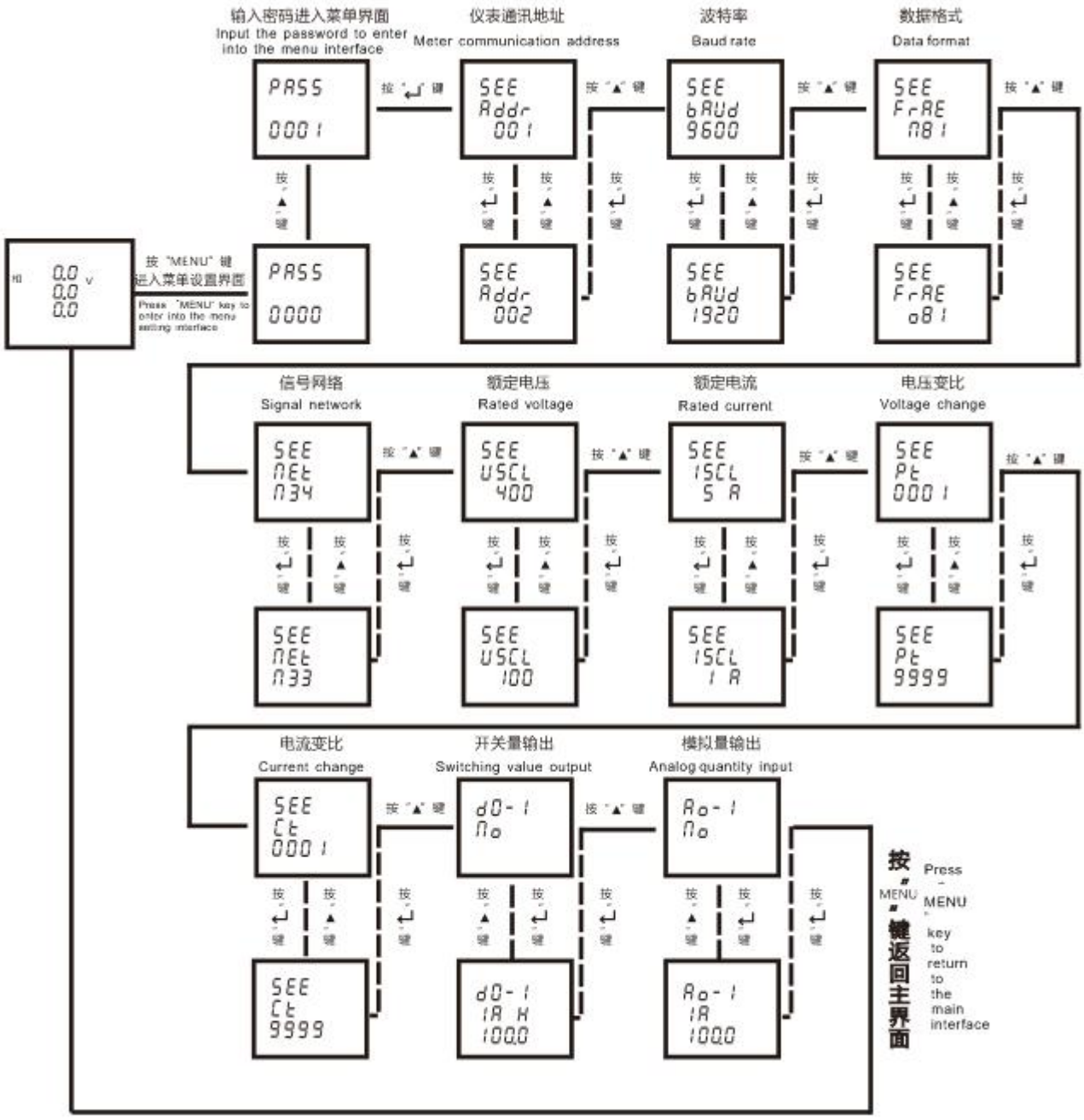

注:——代表可设置

Notes: —— shows can setting

注:不带选配功能，选配功能界面无显示。

Notes: No optional function, and the optional function interface is not displayed.

4043h	谐波 Harmonic wave UC9	Integer	1	R	0.1%	
4044h	谐波 Harmonic wave UC10	Integer	1	R	0.1%	
4045h	谐波 Harmonic wave UC11	Integer	1	R	0.1%	
4046h	谐波 Harmonic wave UC12	Integer	1	R	0.1%	
4047h	谐波 Harmonic wave UC13	Integer	1	R	0.1%	
4048h	谐波 Harmonic wave UC14	Integer	1	R	0.1%	
4049h	谐波 Harmonic wave UC15	Integer	1	R	0.1%	
404Ah	谐波 Harmonic wave UC16	Integer	1	R	0.1%	
404Bh	谐波 Harmonic wave UC17	Integer	1	R	0.1%	
404Ch	谐波 Harmonic wave UC18	Integer	1	R	0.1%	
404Dh	谐波 Harmonic wave UC19	Integer	1	R	0.1%	
404Eh	谐波 Harmonic wave UC20	Integer	1	R	0.1%	
404Fh	谐波 Harmonic wave UC21	Integer	1	R	0.1%	
4050h	谐波 Harmonic wave UC22	Integer	1	R	0.1%	
4051h	谐波 Harmonic wave UC23	Integer	1	R	0.1%	

4034h	谐波 Harmonic wave UB24	Integer	1	R	0.1%	
4035h	谐波 Harmonic wave UB25	Integer	1	R	0.1%	
4036h	谐波 Harmonic wave UB26	Integer	1	R	0.1%	
4037h	谐波 Harmonic wave UB27	Integer	1	R	0.1%	
4038h	谐波 Harmonic wave UB28	Integer	1	R	0.1%	
4039h	谐波 Harmonic wave UB29	Integer	1	R	0.1%	
403Ah	谐波 Harmonic wave UB30	Integer	1	R	0.1%	
403Bh	谐波 Harmonic wave UB31	Integer	1	R	0.1%	
403Ch	谐波 Harmonic wave UC2	Integer	1	R	0.1%	C 相电压谐波， 2-31 次， 整型数，单位 0.1% C phase voltage harmonic wave, 2-31 times, Integers, Unit 0.1%
403Dh	谐波 Harmonic wave UC3	Integer	1	R	0.1%	
403Eh	谐波 Harmonic wave UC4	Integer	1	R	0.1%	
403Fh	谐波 Harmonic wave UC5	Integer	1	R	0.1%	
4040h	谐波 Harmonic wave UC6	Integer	1	R	0.1%	
4041h	谐波 Harmonic wave UC7	Integer	1	R	0.1%	
4042h	谐波 Harmonic wave UC8	Integer	1	R	0.1%	

液晶显示方式：

Liquid crystal display manner:

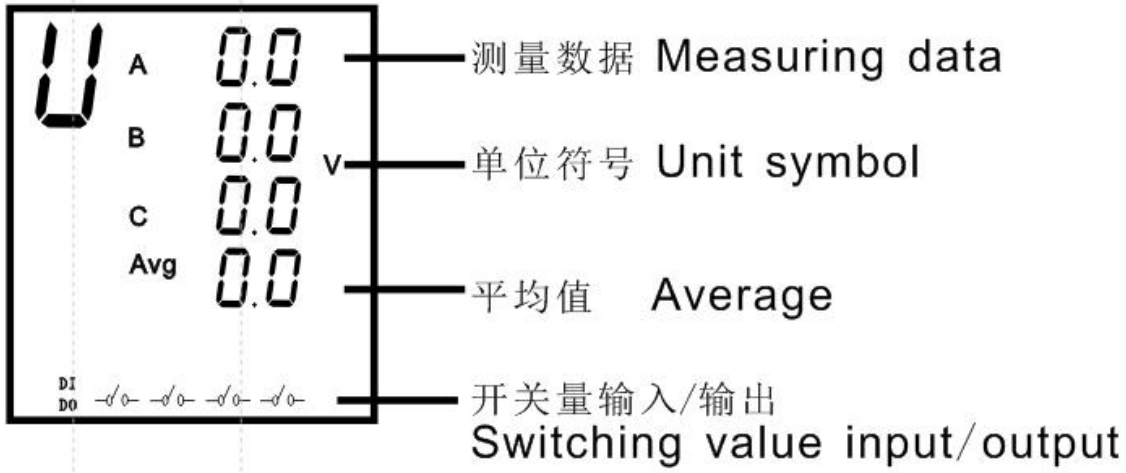

第一级 First level	第二级 Second level	第三级 Third level	描述 Descriptions
密码 Password	密码数据 Password data 0000	-	当输入的密码正确时才可以进入编程 Enter into the programming when inputting the correct password
通讯设置 Communication setting	通讯地址 Communication address ADDR	1-247	仪表地址范围 1-247 Instrument address range1-247
	通讯波特率 Communication baud rate BAUD	9600/19200/4800	波特率 9600/19200/4800 可选 Optional baud rate 9600/19200/4800
	通讯帧格式设置 FRAE Communication frame format setting FRAE	N. 8. 1/0.8. 1/ E. 8. 1/N. 8.2	数据格式：默认值 N. 8.1,含义如下： N:没有校验位；8:8 个数据位;0:奇校验;e :偶校验;1/2:1 或 2 个停止位 Data format: Default value N. 8.1, implication as below: N: without the check bit; 8:8 data bits; 0: odd check bit; e: even check bit; 1/2:1 or 2 stop bit
信号输入与倍率 Signal input and multiple	信号网络 Signal network NET	n. 3. 4/n. 3. 3	接线方式：n. 3. 4 三相四线制 n. 3. 3 三相三线制 Wiring manner: n. 3. 4 three-phase four-wire system n. 3. 3 three-phase three-wire system
	额定电压 Rated voltage U.SCL	400/100	选择测量电压信号的量程 Choose the measuring range of measuring voltage signal
	额定电流 Rated current I.SCL	5/1	选择测量电流信号的量程 Choose the measuring range of measuring current signal

<table>
<tr><td rowspan="2"></td><td>电压倍率 Voltage multiple PT</td><td>0001-9999</td><td>设置电压信号倍率=1 次值/2 次值
Set the voltage signal multiple=1 time value/ 2 time value</td></tr>
<tr><td>电流倍率 Current multiple CT</td><td>0001-4999</td><td>设置电流信号倍率=1 次值/2 次值
Set the current signal multiple=1 time value/ 2 time value</td></tr>
<tr><td rowspan="4">开关量 Switching value</td><td>DO-1</td><td colspan="2" rowspan="4">Ua/Ub/Uc/Uab/Ubc/Uca/la/lb/lc
Pa/Pb/Pc/Ps
Qa/Qb/Qc/Qs
Sa/Sb/Sc/Ss
PF
F
rE
注：三相三线没有 B 相及相电压设置项
Notes: three phase three wire without B phase and phase voltage setting item</td></tr>
<tr><td>DO-2</td></tr>
<tr><td>DO-3</td></tr>
<tr><td>DO-4</td></tr>
<tr><td rowspan="3">模拟量 Analog quantity</td><td>AO-1</td><td colspan="2" rowspan="3">Ua/Ub/Uc/Uab/Ubc/Uca/la/lb/lc
Pa/Pb/Pc/Ps
Qa/Qb/Qc/Qs
Sa/Sb/Sc/Ss
PF
注：三相三线没有 B 相及相电压设置项
Notes: three phase three wire without B phase and phase voltage setting item</td></tr>
<tr><td>AO-2</td></tr>
<tr><td>AO-3</td></tr>
</table>

五、通讯功能

V. Communication function

5-1、物理层

5-1 Physical layer

1）RS485 通讯接口，异步半双工模式；

1) RS485 communication interface, asynchronous half duplex communication mode;

2）通讯速度 4800～19200bps 可设置，出厂默认为 9600 bps；

2) Communication speed 4800～19200bps can be set, delivery default is 9600 bps;

3）字节传送格式：1 位起始位，8 位数据位，1 位校验位，1-2 位停止位(n82、o81、e81、n81)可选；

3) Byte transmission format: 1 start bit, 8 data bits, 1 check bit, 1-2 stop bit (n82、o81、e81、n81) optional;

4）第二路 RS485，只用作主机,本表可以多块组合，组成分散式采集系统,将当地多块表的数据集中到主机，再由主机上传，协议相同。

4) The second circuit RS485 is only used as the host, this meter can be made the multi-block combination, and composed as the scattered acquisition system, centralize the data of local multi-block meter to the host, and then upload by the host, the agreement is same.

4025h	谐波 Harmonic wave UB9	Integer	1	R	0.1%	
4026h	谐波 Harmonic wave UB10	Integer	1	R	0.1%	
4027h	谐波 Harmonic wave UB11	Integer	1	R	0.1%	
4028h	谐波 Harmonic wave UB12	Integer	1	R	0.1%	
4029h	谐波 Harmonic wave UB13	Integer	1	R	0.1%	
402Ah	谐波 Harmonic wave UB14	Integer	1	R	0.1%	
402Bh	谐波 Harmonic wave UB15	Integer	1	R	0.1%	
402Ch	谐波 Harmonic wave UB16	Integer	1	R	0.1%	
402Dh	谐波 Harmonic wave UB17	Integer	1	R	0.1%	
402Eh	谐波 Harmonic wave UB18	Integer	1	R	0.1%	
402Fh	谐波 Harmonic wave UB19	Integer	1	R	0.1%	
4030h	谐波 Harmonic wave UB20	Integer	1	R	0.1%	
4031h	谐波 Harmonic wave UB21	Integer	1	R	0.1%	
4032h	谐波 Harmonic wave UB22	Integer	1	R	0.1%	
4033h	谐波 Harmonic wave UB23	Integer	1	R	0.1%	

4016h	谐波 Harmonic wave UA24	Integer	1	R	0.1%	
4017h	谐波 Harmonic wave UA25	Integer	1	R	0.1%	
4018h	谐波 Harmonic wave UA26	Integer	1	R	0.1%	
4019h	谐波 Harmonic wave UA27	Integer	1	R	0.1%	
401Ah	谐波 Harmonic wave UA28	Integer	1	R	0.1%	
401Bh	谐波 Harmonic wave UA29	Integer	1	R	0.1%	
401Ch	谐波 Harmonic wave UA30	Integer	1	R	0.1%	
401Dh	谐波 Harmonic wave UA31	Integer	1	R	0.1%	
401Eh	谐波 Harmonic wave UB2	Integer	1	R	0.1%	B 相电压波， 2-31 次, 整型数， 单位 0.1% B phase voltage harmonic wave, 2-31 times, Integers, Unit 0.1%
401Fh	谐波 Harmonic wave UB3	Integer	1	R	0.1%	
4020h	谐波 Harmonic wave UB4	Integer	1	R	0.1%	
4021h	谐波 Harmonic wave UB5	Integer	1	R	0.1%	
4022h	谐波 Harmonic wave UB6	Integer	1	R	0.1%	
4023h	谐波 Harmonic wave UB7	Integer	1	R	0.1%	
4024h	谐波 Harmonic wave UB8	Integer	1	R	0.1%	

六、电能计量与电能脉冲输出（如有配置）

VI. VI. Electrical energy metering and electrical energy pulse output (if have configuration)

智能综合电参数仪表可提供双向有功、双向无功电能计量，2 路电能脉冲输出功能和 RS485 的数字接口来完成电能数据的显示和远传。仪表实现有功电能、无功电能 1 次侧数据，集电级开路的光耦继电器的电能脉冲实现有功电能和无功电能的远传，可采用远程的计算机终端、PLC、DI 开关采集模块采集仪表的脉冲总数来实现电能累积计量。所采用输出方式是电能的精度检验的方式（国家计量规程：标准表的脉冲误差比较方法）。

Intelligent comprehensive electric parameter meter can provide the two-way active, two-way reactive electric energy metering, 2 circuits electric energy pulse output function and RS485 digital interface to complete the electric energy data display and fast transmission. The meter realizes the active electric energy, one time side data of reactive electric energy, the electric energy pulse of optical coupling relay of open collector realizes the fast transmission of active and reactive electric energy, the electric energy cumulative metering can be realized by the remote computer terminal, PLC, and the total number of pulse of acquisition meter of acquisition module of D1 switch. The output manner is adopted by electric energy accuracy inspection manner (national metering procedures: the comparative method of pulse error of standard meter).

（a）电气特性：标准 TTL 电平。

(a) Electrical characteristics: standard TTL level.

（b）脉冲常数：固定为 3600 imp/kWh，其意义为：当仪表累积 1kWh 时脉冲输出个数为 N（3600）个，需要强调的是 1kWh 为电能的 2 次测电能数据，在 PT、CT 的情况下，相对的 N 个脉冲数据对应 1 次测电能为 1kWh×电压变比 PT×电流变比 CT。

(b) Pulse constant: it is fixed as 3600 imp/kWh, the meaning shows: when the meter accumulates 1kWh, the pulse output number is N (3600), attention: 1kWh is secondary measuring electric energy data of electric energy, the corresponding one measuring electric energy of relative N pulse data is 1kWh* voltage ratio PT* current ratio CT under PT,CT status.

（c）应用举例：PLC 终端使用脉冲计数装置，假定在长度为 t 的一段时间内采集脉冲个数为 N 个，仪表输入为：10kV/100V 400A/5A，则该时间段内仪表电能累积为：N/3600×100×80 度电能。

(c) Application example: PLC terminal uses the pulse counter, suppose the length is t, the acquisition pulse number is N within a certain time,meter input is: 10kV/100V 400A/5A, and the meter electric energy in that time interval is accumulate as: N/3600*100*80 degrees of electric energy.

七、开关量和模拟量

VII. Switching value and analog quantity

7-1、开关量输入

7-1. Switching value input

仪表带有 1～4 开关量输入，有源输入（AC220V ±10%）湿接点和无源输入干接点（可选）。DI 输入可用于监测外部开关量状态。如报警信号、分合闸状态、手车位置、电容补偿柜电容投入状态等。状态信息可通过 LED 面板指示，也可通过通信接口传输到远端。

The meter is equipped with 1～4 switching value input, active input (AC220V ±10%) wet contact and passive dry contact (optional). DI input can be used for monitoring the outside switching value status. Such as the alarm signal, divide-shut brake status, handcart position, capacitance input status of capacitance compensation cabinet and so on. The status information can be indicated by LED panel, and it also can be transmitted to the fast terminal by communication interface.

7-2、开关量输出

7-2. Switching value output

仪表带有 1～4 路开关量输出，均为继电器输出。DO 开关量输出有两种工作模式可选,可设定为测量值门限动作以及通过通信接口由远程控制输出。每路输出可独立设置。

The meter is equipped with 1～4 switching value output, which are all the relay output. DO switching value output has two working modes, it can be set as the threshold action of measuring value and the output can be controlled by the remote control from the communication interface. Per circuit output can be set independently.

DO 设置界面显示如下图：

DO setting interface is displayed as the following drawing:

DO-2 -设置第二路输出；IA -设置控制信号的参考量为 A 相电流 ；H- 高于门限值动作(L 为低于门限值动作)；100.0- 动作的门限值=100.0%IA。

DO-2 – set the second circuit output; IA – set the reference quantity of control signal is A phase current; H- higher than the threshold value action (L is lower than the threshold value action); 100.0- action threshold value =100.0%IA.

注：遥控功能需要在 DO 界面相应通道内选择 RE 功能设置保存后可实现。

Notes: Remote control function can be realized after saving in the corresponding pathway of DO interface by selecting RE functional setting.

7-3、变送输出功能

7-3 Transmitting output function

仪表可带有 3 路变送输出功能，设定的额定参数百分比从 0～100%对应变送输出为 4～20mA 直流电流。

The meter can be equipped with 3 circuits transmitting output function, the percentage of setting rated parameter from 0～100% , which are corresponding to 4～20mA DC current.

设置：

Setting:

AO-2：第二路模拟量输出设置

AO-2： The second analog quantity output setting

PC：选取参考量为 C 相有功功率

PC: Take the reference quantity is C phase active power

108．0：108.0%*PC 额定功率为 20mA

108．0：108.0%*PC rated power is 20mA

模拟量输出最大负载电阻：510Ω

Maximum load resistance of analog quantity output: 510Ω

4007h	谐波 Harmonic wave UA9	Integer	1	R	0.1%	
4008h	谐波 Harmonic wave UA10	Integer	1	R	0.1%	
4009h	谐波 Harmonic wave UA11	Integer	1	R	0.1%	
400Ah	谐波 Harmonic wave UA12	Integer	1	R	0.1%	
400Bh	谐波 Harmonic wave UA13	Integer	1	R	0.1%	
400Ch	谐波 Harmonic wave UA14	Integer	1	R	0.1%	
400Dh	谐波 Harmonic wave UA15	Integer	1	R	0.1%	
400Eh	谐波 Harmonic wave UA16	Integer	1	R	0.1%	
400Fh	谐波 Harmonic wave UA17	Integer	1	R	0.1%	
4010h	谐波 Harmonic wave UA18	Integer	1	R	0.1%	
4011h	谐波 Harmonic wave UA19	Integer	1	R	0.1%	
4012h	谐波 Harmonic wave UA20	Integer	1	R	0.1%	
4013h	谐波 Harmonic wave UA21	Integer	1	R	0.1%	
4014h	谐波 Harmonic wave UA22	Integer	1	R	0.1%	
4015h	谐波 Harmonic wave UA23	Integer	1	R	0.1%	

103Eh	THDUB	Float	2	R	%	B 相电压失真度 Distortion degree of B phase voltage
1040h	THDUC	Float	2	R	%	C 相电压失真度 Distortion degree of C phase voltage
1042h	THDIA	Float	2	R	%	A 相电流失真度 Distortion degree of A phase current
1044h	THDIB	Float	2	R	%	B 相电流失真度 Distortion degree of B phase current
1046h	THDIC	Float	2	R	%	C 相电流失真度 Distortion degree of C phase current
1048h	AENG	Float	2	R	Kwh	正有功电能 Positive active electric energy
104Ah	APENG	Float	2	R	Kwh	负有功电能 Negative active electric energy
104Ch	RENG	Float	2	R	KVarh	正无功电能 Positive reactive electric energy
104Eh	RPENG	Float	2	R	Kvarh	负无功电能 Negative reactive electric energy

谐波数据寄存器地址:

Harmonic wave data register address:

地址 Address	数据内容 Data content	格式 Format	Word	特性 Characteristics	单位 Unit	说明 Instructions
4000h	谐波 Harmonic wave UA2	Integer	1	R	0.1%	A 相电压谐波， 2-31 次, A phase voltage harmonic wave, 2-31 times, 整型数， Integers, 单位 0.1% Unit 0.1%
4001h	谐波 Harmonic wave UA3	Integer	1	R	0.1%	
4002h	谐波 Harmonic wave UA4	Integer	1	R	0.1%	
4003h	谐波 Harmonic wave UA5	Integer	1	R	0.1%	
4004h	谐波 Harmonic wave UA6	Integer	1	R	0.1%	
4005h	谐波 Harmonic wave UA7	Integer	1	R	0.1%	
4006h	谐波 Harmonic wave UA8	Integer	1	R	0.1%	

八、常见问题及解决办法

VIII. Common problems and solutions

8-1、关于通讯

8-1 About communication

1)仪表没有回送数据

1) The meter without the loopback data

答：首先确保仪表的通讯设置信息如从机地址、波特率、校验方式等与上位机要求一致；如果现场多块仪表通讯都没有数据回送，检测现场通讯总线的连接是否准确可靠，RS485 转换器是否正常。如果只有单块或者少数仪表通讯异常，也要检查相应的通讯线，可以修改交换异常和正常仪表从机的地址来测试，排除或确认上位机软件问题，或者通过交换异常和正常仪表的安装位置来测试，排除或确认仪表故障。

Answer: First to make sure the meter communication setting information, such as follow machine address, baud rate, verification mode are required to accord to the requirements of upper computer; if several meters' communication does not resent the data on the field, detect whether the connection of on-site communication bus is correct and reliable, RS485 converter is normal. If only one meter or several meters' communication is abnormal, also check the corresponding communication lines, can make the test by modifying the abnormal change and the follow machine address of normal meter, eliminate or confirm the software problems of upper computer, or make the test by the abnormal change and the installation position of normal meter, eliminate or confirm the meter failure.

2)仪表回送数据不准确

2) The meter loopback data is incorrect

答：智能综合电参数仪表的通讯开放给客户的数据有 float 型数据和 int/long 型数据。请仔细阅读通讯地址表中关于数据存放地址和存放格式的说明，并确保按照相应的数据格式转换。推荐 MODBUS- RTU 通讯协议测试软件 MODSCAN，该软件遵循标准的 MODBUS- RTU 协议，并且数据可以按照整型、浮点型、16 进制等格式显示，能够直接与仪表显示数据对比。

Answer: Intelligent comprehensive electric parameter meter communication opens float type data and int/long type data to the customers. Please carefully read the instructions of data storage address and storage format in the communication address table, and make sure the transformation is accorded with the corresponding data format. Recommend the test software MODSCAN of MODBUS- RTU communication protocol, this software complies with the standard MODBUS- RTU protocol, and the data can be displayed by the integer type, floating-point type, hexadecimal and other formats, it can be directly compared with the meter's display data.

8-2、关于 U、I、P 等测量不准确

8-2 About U, I, P and others are measured incorrectly

答：首先需要确保正确的电压和电流信号已经连接到仪表上，可以使用万用表来测量电压信号，必要的时候使用钳形表来测量电流信号。其次确保信号线的连接是正确的，比如电流信号的同名端（也就是进线端） 以及各相的相序是否出错。另外需要注意的是仪表显示的电量为一次电网值，如果表内设置的电压电流互感器的倍率与实际使用互感器倍率不一致，也会导致仪表电量显示不准确。表内电压电流的量程出厂后不容许修改。实际接线方式应与订购时接线方式一致，否则也将导致错误的显示信息。

Answer: Firstly, make sure the correct voltage and current signal have been connected to the meter, can use the multimeter to measure the voltage signal, or use the clamp meter to measure the current signal when necessary. Secondly, make sure the signal line connection is correct, for example, the dotted terminal of current signal (namely the incoming terminal) and the phase sequence of all the phases are correct or not. In addition, need to pay attention to the meter displays the electric quantity is the primary power grid value, if the multiple of voltage and current transformer in the meter is inconsistent with the multiple of actual using transformer, which also lead to the meter electric quantity is displayed incorrect. The voltage and current measuring range in the meter is not allowed to change after delivering. The actual wiring manner should be consitent with the purchasing wiring manner, or else it also cause to the wrong display information.

8-3、关于电能走字不准确

8-3 About the electrical energy reading is incorrect

答：仪表的电能累加是基于对功率的测量，先观测仪表的功率值与实际负荷是否相符。多功能电能表支持双向电能计量，在接线错误的情况下，总有功功率为负的情况下，电能会累加到反向有功电能，正向有功电能不累加。在现场使用最多出现的问题是电流互感器进线和出线接反。另外相序接错也会引起仪表电能走字异常。

Answer: The meter electrical energy accumulation is based on the power measurement, observe the power value of measuring meter is accorded with the actual load or not. Multifunctional electric energy meter supports the two-way electric energy metering, the electric energy will accumulate to the reverse active electric energy in the case of wrong wiring and negative total active power, the forward active electric energy does not accumulate. The incoming and outgoing lines of current transformer are always connected conversely in the field. Moreover, the phase sequence is connected wrong also cuase to the meter l electric energy has the abnormal reading.

九、通讯协议

IX. Communication protocol

MODBUS RTU 通讯地址信息表

MODBUS RTU communication address information table

通讯报文举例：1.读数据（功能码：03）：这个功能可使用户获得终端设备采集、记录的数据，以及系统参数。主机一次请求采集的数据个数没有限制，但不能超出定义的地址范围。下面的例子是读三相电流的数值的查询数据帧（主机）

Communication message example: 1. Read the data (functional code: 03): this function can let the user to obtain the terminal equipment acquisition, recording data and system parameters. The host acquisition data of a request is not limited, but it can not exceed the defined address range. The following example is the query data frame of numerical value of three-phase current (host)

地址 Address	命令 Command	起始寄存器地址 (高位） The starting register address (high digit)	起始寄存器地址 (低位） The starting register address (low digit)	寄存器个数 (高位） The starting register number (high digit)	寄存器个数 (低位） The starting register number (low digit)	CRC16 低位 low digit	CRC16 高位 high digit
01H	03H	10H	0CH	00H	06H	01H	0BH

9 -1、数据格式说明：

9-1 Data format instruction

1、Float 格式定义按 IEEE 754，接收顺序按 阶码/尾数高/尾数次高/尾数低来传输。比如 200 .0,接收顺序是:43H 48H 00H 00H。.

1. Float format definition accords to IEEE 754, the receiving order is accorded with level code/highest mantissa/higher mantissa/low mantissa. For example, 200 .0, the receiving order is: 43H 48H 00H 00H.

2、Int 整型数 16 位定点数,用在谐波含量时,换算成十进制要乘 0 . 1%。

2. Int integer 16 fixed-point bits, when it is used in the content of harmonic wave, need to multiply by 0 . 1% when converting into decimalism.

9-2、电参数数据寄存器地址:

9-2. Electric parameter data register address

地址 Address	数据内容 Data content	格式 Format	Word	特性 Characteristics	单位 Unit	说明 Instructions
1000h	VAL_A	Float	2	R	V	分相相电压 单位：伏特 Split-phase phase voltage unti: volt
1002h	VAL_B	Float	2	R	V	
1004h	VAL_C	Float	2	R	V	

1006h	Line_VAL_A	Float	2	R	V	分相线电压 单位：伏特 Split-phase line voltage unti: volt
1008h	Line_VAL_B	Float	2	R	V	
l00Ah	Line_VAL_C	Float	2	R	V	
l00Ch	CUR_A	Float	2	R	A	分相电流 单位：安培 Split-phase current unit: ampere
l00Eh	CUR_B	Float	2	R	A	
l0l0h	CUR_C	Float	2	R	A	
1012h	POW_A	Float	2	R	ff	分相有功功率 Split-phase active power
1014h	POW_B	Float	2	R	ff	
1016h	POW_C	Float	2	R	W	
1018h	RPOW_A	Float	2	R	Var	分相无功功率 Split-phase reactive power
101Ah	RPOW_B	Float	2	R	Var	
101Ch	RPOW_C	Float	2	R	Var	
101lEh	S_A	Float	2	R	VA	分相视在功率 Split-phase apparent power
1020h	S_B	Float	2	R	VA	
1022h	S_C	Float	2	R	VA	
1024h	Tot_rpow	Float	2	R	Var	三相无功总功率 Three-phase reactive total power
1026h	ANG_BA	Float	2	R	度	电压 B 相与 A 相之间的相位角 Phase angle between B phase and A phase of voltage
1028h	ANG_CA	Float	2	R	度	电压 C 相与 A 相之间的相位角 Phase angle between C phase and A phase of voltage
102Ah	ANG_AA	Float	2	R	度	A 相电流与 A 相电压之间的相位角 Phase angle between A phase current and A phase voltage
102Ch	ANG_BB	Float	2	R	度	B 相电流与 B 相电压之间的相位角 Phase angle between B phase current and B phase voltage
102Eh	ANG_CC	Float	2	R	度	C 相电流与 C 相电压之间的相位角 Phase angle between C phase current and C phase voltage
1030h	PHASE_A	Float	2	R		分相功率因数 Split-phase power factor
1032h	PHASE_B	Float	2	R		
1034h	PHASE_C	Float	2	R		
1036h	Tot_pow	Float	2	R	W	三相有功总功率 Three-phase active total power
1038h	FRQ	Float	2	R	Hz	频率 Frequency
103Ah	COS	Float	2	R		三相总功率因数 Three-phase total power factor
103Ch	THDUA	Float	2	R	%	A 相电压失真度 Distortion degree of A phase voltage